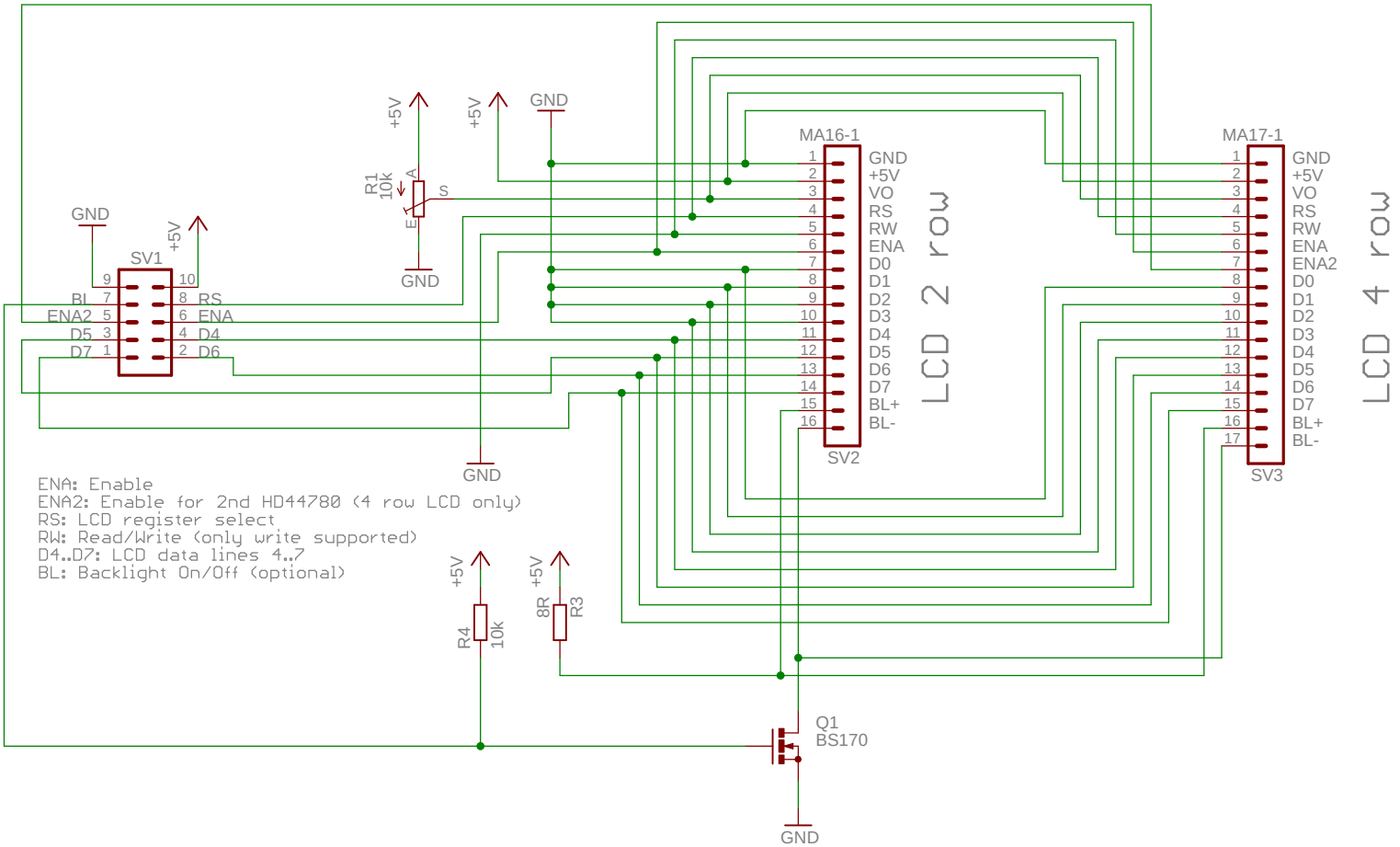

LCD Adpater, V1.1

LCD Apdater for 2/4 row alphanumeric LCD modules.

Christian Stadler

lcdadapt

01.11.2011 17:15:34

Sheet: 1/1

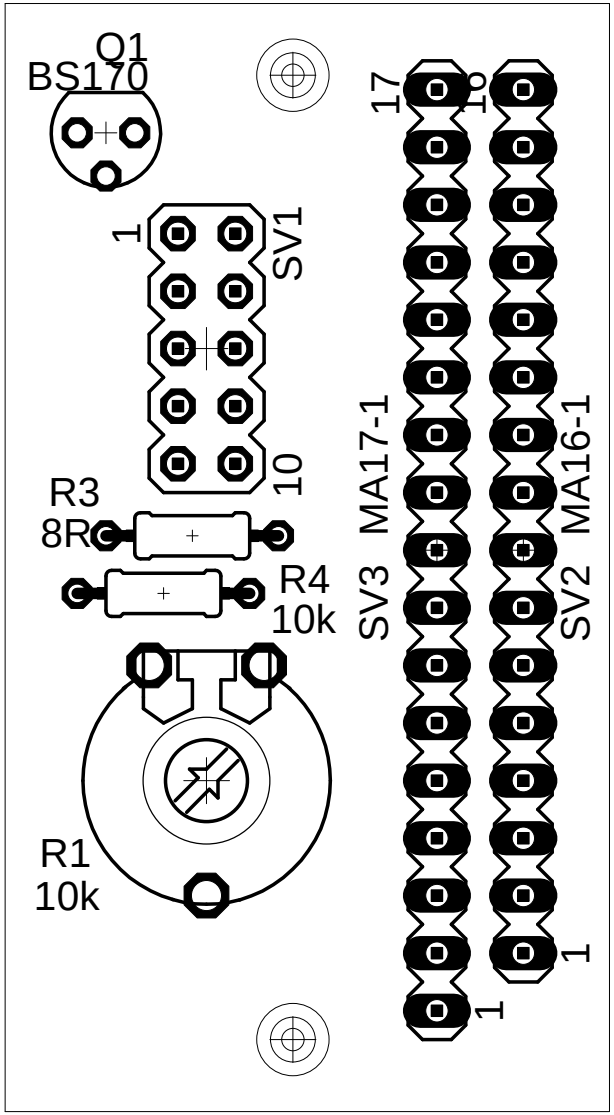
Q1
BS170
1
SV1
10
R3
8R
R4
10k
R1
10k
SV3 MA17-1
17
1
SV2 MA16-1
16
1